2024 First International Conference on Pioneering Developments in Computer Science & Digital Technologies (IC2SDT) | 979-8-3503-6501-6/24/$31.00 ©2024 IEEE | DOI: 10.1109/IC2SDT62152.2024.10696496

HBTrackr: AI-based Heart Attack Prediction through ECG Monitoring on Wearable Devices

A Ancy Micheal
School of Computer Science and Engineering, Vellore Institute of Technology
Chennai, India
ancymicheal.a@vit.ac.in

Kriti Gupta
School of Computer Science and Engineering, Vellore Institute of Technology
Chennai, India
kriti.gupta2021a@vitstudent.ac.in

Rishi Singh
School of Computer Science and Engineering, Vellore Institute of Technology
Chennai, India
rishi.singh2021@vitstudent.ac.in

Vikram Singh
School of Computer Science and Engineering, Vellore Institute of Technology
Chennai, India
vikram.singh2021a@vitstudent.ac.in

Bipasha Mohanty
School of Computer Science and Engineering, Vellore Institute of Technology
Chennai, India
bipasha.mohanty2021@vitstudent.ac.in

ABSTRACT - The topic proposes the existence of various mobile applications designed to predict and detect abnormal heartbeats, providing individuals with an accessible tool for monitoring their cardiac health. Advancement in AI supports heart attack prediction which can be deployed in various smart applications. In the paper, a novel AI model is implemented to read the Electrocardiogram (ECG) of the patient and understand the heart health of the person by wearing a smart watch. The proposed framework focuses on detection of sudden cardiac arrest and prediction of abnormal heartbeat using You Only Look Once(YOLOv8) in the wearable devices. The model is trained on ECG images dataset of cardiac patients using a matrix of features such as myocardial infarction, irregular heart rhythms, and healthy cardiac patterns. The model achieves high precision, recall, and F1 score, demonstrating its effectiveness in accurately classifying cardiac conditions. HBTrackr is an easy-to-use smartwatch app which is incorporated with an AI model that uses the pre-existing sensors in the watch.

Keywords: pulse rate, heart attack tracker, ECG readings, object detection

I. INTRODUCTION

The utilization of smartwatches for enhancing heart health monitoring has witnessed a steady rise in recent years. Concurrently, advancements in deep learning techniques have significantly bolstered disease prediction capabilities, particularly in the realm of cardiovascular health. Heart attacks, stemming from factors such as unhealthy lifestyles, heightened stress, and elevated cholesterol levels, pose substantial threats to human well-being. Addressing this challenge requires empowering individuals to predict the onset of a heart attack autonomously, without necessarily relying on direct medical intervention. In response to this imperative, smartwatches have emerged as promising platforms, leveraging AI-based functionalities to offer diverse forms of health monitoring support. Table 1 presents an overview of relevant mobile applications designed to provide assistance in heart health management. Recognizing the importance of extending this heart health management assistance to include heart attack prediction, this paper aims to explore the landscape of smartwatch applications.

TABLE I. Mobile applications related to heart health between 2016 to 2023

Mobile Application	Features (Tracks/Measures)
HeartWatch(2015) [1]	• Pulses, heart rate • Workout time • Calories burnt
My Cardiac coach(2016) [2]	• Weight, Blood pressure • Walking, Running • Number of calories burnt
Welltory(2016) [3]	• Stress • Energy
iCardio(2019) [4]	• Heart rate • Distance covered during a run or a walk
Instant heart rate(2023) [5]	• Pulse • Change in colour of fingers
SmartBP (2023) [6]	• Blood pressure, weight • Provide normal BMI • Pulse pressure
Garmin (2023) [7]	• Walking and running time • Heart beat

979-8-3503-6501-6/24/$31.00 ©2024 IEEE

Authorized licensed use limited to: KIIT University. Downloaded on March 09,2026 at 11:00:08 UTC from IEEE Xplore. Restrictions apply.

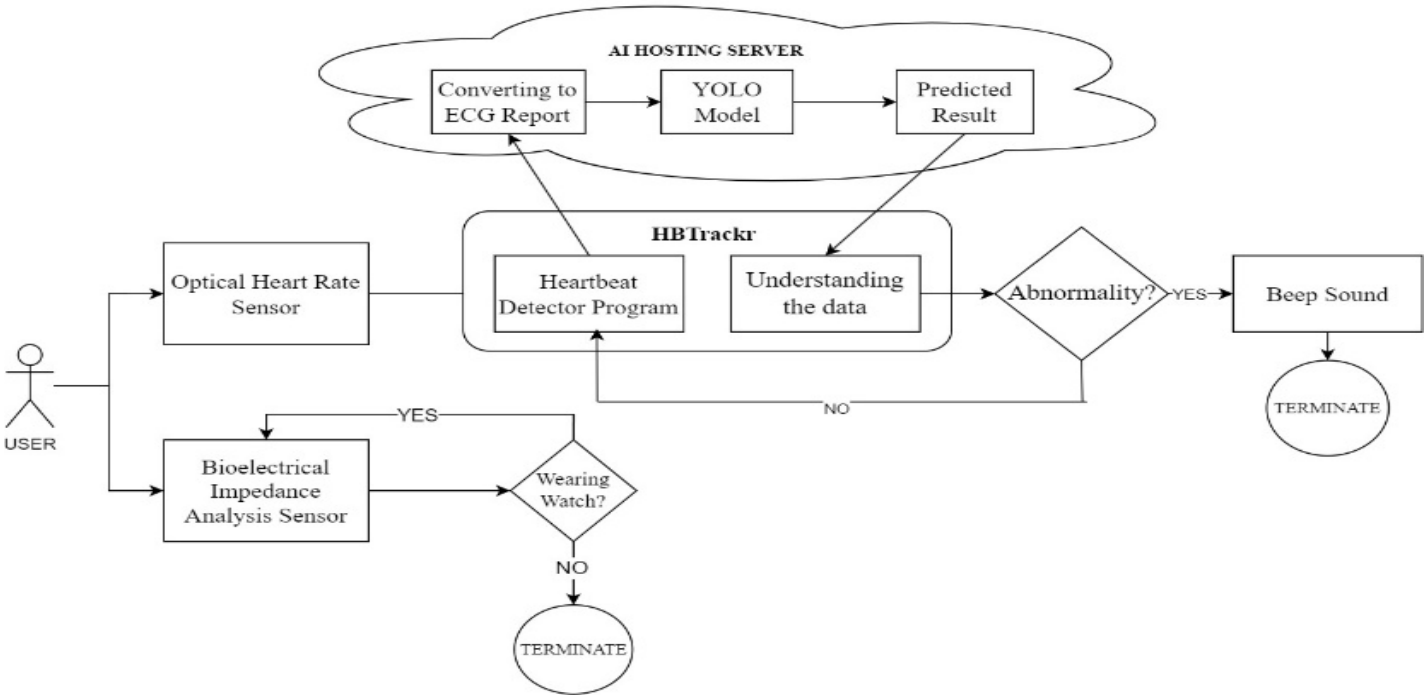

Fig. 1 Framework of the proposed application

II. LITERATURE SURVEY

Ayano YM et al. studied that heart disease is a major global mortality cause, and ECGs are the least expensive non-invasive diagnostic technique [8]. Machine learning algorithms offer alternatives, but the black box nature and difficulty explain the outcome that hinders confidence in Interactive Machine Learning (IML) models. Roger chou et al. dealt with screening asymptomatic adults with resting or exercise electrocardiography [9]. The research work explained that the coronary heart disease is the leading cause of death. Patel et al. proposed that heart attack sensors are helpful in detecting abnormality in heart in early age [10]. There are 3 sensors are deployed such as Arduino uno, Pulse sensor and The node Micturating Cysto-urethrogram (MCU) Event stream processing (ESP) 8266. Saganowski et al. studied about wearables to detect changes in the activities of the body[11]. This study evaluates over 50 off-the-shelf wearable devices for their usefulness in emotion and stress recognition, as well as sleep, meditation, and activity monitoring.R.S. Binti Rosli et al. proposed an Arduino program tailored for heart rate monitoring devices[12]. This development got a unanimous acclaim from health professionals. It is a user-friendly function with short message service (SMS) alert system deployed in it.

V. Selvakumar et al. developed a two-part system for chronic heart disease prediction[13]. The first component leverages an iPhone Operating System (iOS) application integrated with Internet of Things (IoT) architecture, analyzing the health using body sensors. In the second phase, employing machine learning techniques, particularly Support Vector Machines (SVM), emerged as the frontrunner in accuracy for analyzing this data.

E. Talab et al., proposed a cost-effective mobile stethoscope application [14]. This tool harnesses the smartphone's microphone to capture heart sounds, and understand the health of a person. Gusev et al. in 2017 presented a sophisticated system designed for early detection and alerting of heart attacks [15]. It integrates a wireless and mobile ECG biosensor, a data center, smartphone and web applications, and remote 24-hour healthcare support. This system operates on the premise that heart attacks can be detected at least two hours before onset, allowing for timely medical help to be processed. Despite several proof-of-concept studies, no commercial products currently match the system's capabilities.

III. METHODOLOGY

This study proposes the feasibility of predicting heart attacks using data collected from ECG images dataset of cardiac patient. An Electrocardiogram (ECG) dataset was employed to train a machine learning model for AI based heart attack prediction on wearable devices. The architecture of the proposed framework is shown in Fig. 1.

The steps involved in the mobile application are listed below:

- The built-in bioelectric impedance analysis sensor to recognize if the person is wearing a watch or not.
- If the person is wearing the watch, the watch uses the optical heart rate sensor to read the heart beats of the user.

Authorized licensed use limited to: KIIT University. Downloaded on March 09,2026 at 11:00:08 UTC from IEEE Xplore. Restrictions apply.

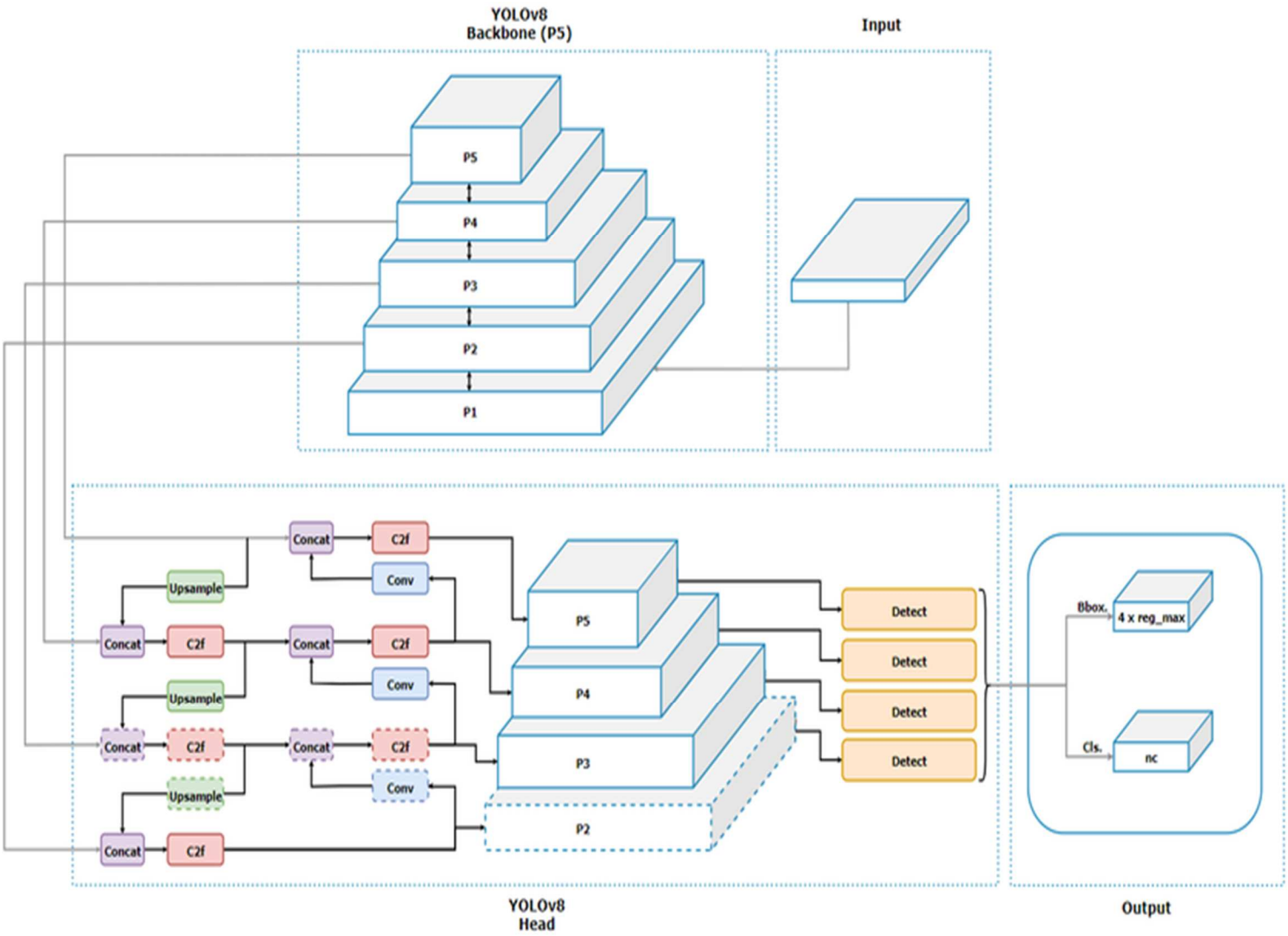

Fig. 2 Architectural diagram of YOLOv8[17]

- Then the function converts the heart beats detected into the ECG image.
- This ECG image is transferred to the YOLOv8 [16] model, which has been trained to read such images.
- The predicted result is sent back to understand by the model.
- Next, if the unusualness such as abnormal ECG or abnormal heart rate has been detected, the watch will alert the user by a beep sound.
- If no abnormality is detected the function with circle back to reading the heart beats of the user till there is an abnormality to be found.

A. YOLOV8:

YOLOv8 is a state-of-the-art object detection model. It provides unified framework. It is a powerful and flexible tool for object detection and segmentation. Here, YOLOv8 is used to analyze ECGs. It is trained on graphical electrocardiogram (ECG) datasets, used to annotate and differentiate normal and abnormal heartbeats. It enables early detection of abnormalities. The architecture of YOLOv8 is shown in Fig. 2. The proposed approach integrates YOLOv8 with HBTrackr, a system for real-time monitoring. HBTrackr continuously monitors the ECG signal, while the YOLOv8-based AI model analyzes the data to detect abnormal heartbeat patterns. This integration signifies a significant advancement in cardiovascular health monitoring. YOLOv8 have the best precision, recall and F1 score. Hence the Precision, Recall and F1-score of the following model is 92.23%,94.61% and 93.40% respectively. (TABLE II)

Authorized licensed use limited to: KIIT University. Downloaded on March 09,2026 at 11:00:08 UTC from IEEE Xplore. Restrictions apply.

TABLE II. Comparison of the proposed methodology

Method	Precision	Recall	F1 score
YOLOv5	55.32%	63.11%	58.95%
YOLOv6	62.89%	66.43%	64.60%
YOLOv7	70.12%	74.26%	72.13%
YOLOv8	92.23%	94.61%	93.40%

The resulting labeled image dataset (Fig. 3) served as the foundation for training the AI model to recognize these visual representations of heart activity for real-time heart attack prediction. In fig. 3, the given figure describes how the described model distinguishes between abnormal and normal heartbeats clearly. The annotated boxes have normal heartbeat (NHB) and abnormal heartbeat (AHB) as headings.

IV.RESULTS AND DISCUSSION

The experiment is evaluated with _Mendeley dataset[19]. The metrics involved for analyzing the proposed framework are recall, precision and F1 Score as given in equation (1),(2) and (3). The analysis of Precision and Recall are shown in Fig.4, Fig. 5.

The precision obtained is 92.23%

The recall obtained is 94.61%

The F1-Score obtained is 93.40%

$$\text{Recall} = TP/(TP+FN) \quad (1)$$

$$\text{Precision} = TP/(TP+FP) \quad (2)$$

$$\text{F1- Score} = 2*[(\text{Precision} * \text{Recall})/ (\text{Precision} + \text{Recall})] \quad (3)$$

Where TP: True Positive, FP: False Positive, TN: True Negative and FN: False Negative

Fig. 3 Sample ECG testing images

Authorized licensed use limited to: KIIT University. Downloaded on March 09,2026 at 11:00:08 UTC from IEEE Xplore. Restrictions apply.

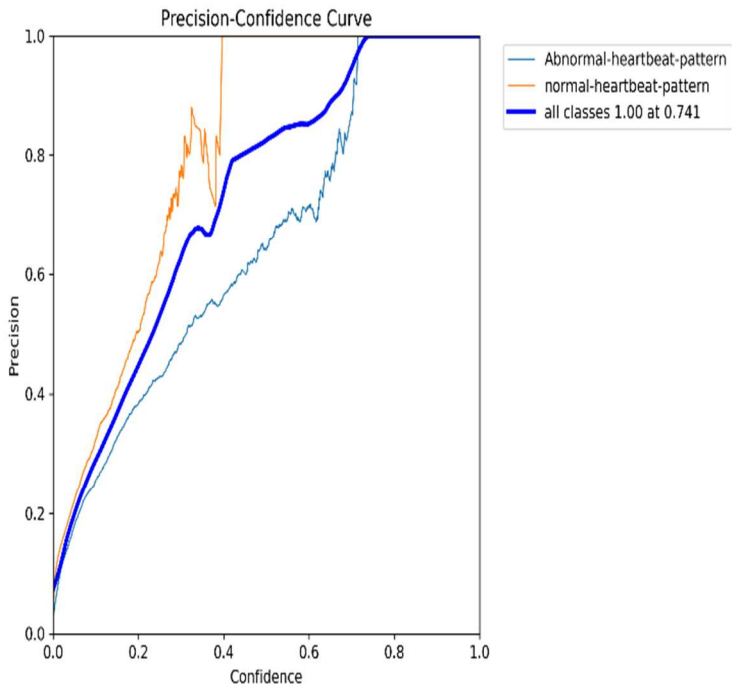

Fig. 4 Precision Curve Analysis

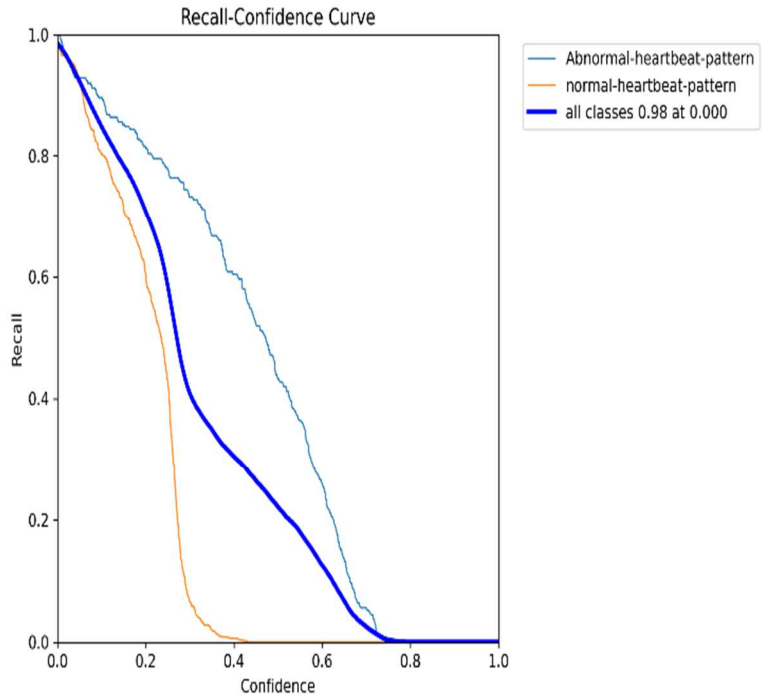

Fig. 5 Recall Curve Analysis

Fig 4. is a graphical representation of how the model is performing on different threshold. It is known, if the precision is high at high confidence, the model is correct. As the given graph shown in Fig. 4 is in direct proportion, it can be implied that the model is correct. The Fig 5. suggests the sensitivity of the model at a particular threshold. It is known, if the value of recall is high at low confidence it suggests that the model is accurate. As the graph shown in Fig. 5 is in indirect proportion, it can be implied that the model is pretty accurate.

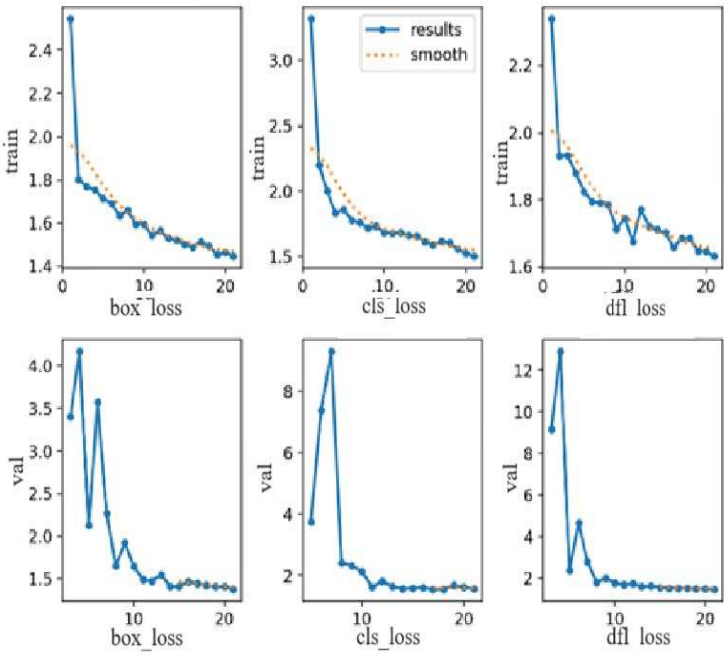

Fig. 6 Loss analysis

Fig. 6 depicts the training progress of multiple models, likely for an object detection task. The graphs present various loss functions (train/val_box_loss, train/cls_loss) and metrics (precision, recall, mAP) to assess the models' performance across epochs (training iterations). Ideally, loss functions should decrease over time, indicating the models are learning, while metrics like precision, recall, and mAP should improve. The inclusion of "smooth" terms suggests a technique applied for better visualization of the curves. Fig. 6. indicates the training and validation loss.

V. CONCLUSION

In conclusion, this paper explored the potential of AI in predicting abnormal heartbeats and cardiac emergencies. The proposed framework, implemented as a smartwatch application (HBTrackr), utilizes YOLOv8 to analyze ECG readings. Trained on a comprehensive dataset containing various heart conditions, this model helps users to monitor their heart health. This AI-powered wearables builds the way for earlier detection and intervention, potentially saving lives. The inclusion of other health care programs like a SOS protocol, medicine reminder etc. is feasible. Beyond its core function, future AI integration could make this a powerful healthcare companion. The app can be enhanced by the addition of medicine reminder, SOS protocol in case of an emergency and can be expanded to iOS. The accuracy of app can also be enhanced by the addition of data to the dataset.

Authorized licensed use limited to: KIIT University. Downloaded on March 09,2026 at 11:00:08 UTC from IEEE Xplore. Restrictions apply.

VI. REFERENCES

[1] HeartWatch: Heart Rate Tracker on the App Store (apple.com)

[2] My Cardiac Coach by American Heart Association (appadvice.com)

[3] Welltory — AI powered copilot for peak wellbeing

[4]iCardio.ai

[5] Instant Heart Rate: HR Monitor – Apps on Google Play

[6] Smart Blood Pressure App (smartbp.app)

[7] Garmin Connect Mobile | Apps | Garmin India

[8] Ayano YM, Schwenker F, Dufera BD, Debelee TG. Interpretable Machine Learning Techniques in ECG-Based Heart Disease Classification: A Systematic Review. *Diagnostics*. 2023; 13(1):111. https://doi.org/10.3390/diagnostics13010111

[9] Roger Chou, Bhaskar Arora, Tracy Dana, et al. Screening Asymptomatic Adults With Resting or Exercise Electrocardiography: A Review of the Evidence for the U.S. Preventive Services Task Force. Ann Intern Med.2011;155:375-385. [Epub 20 September 2011]. doi:10.7326/0003-4819-155-6-201109200-00006

[10] Patel, N., Patel, P., & Patel, N. (2018). Heart attack detection and heart rate monitoring using IoT. International Journal of Innovations and Advancements in Computer Science, IJIACS, 7(4), 612-615.

[11] Saganowski, S., Kazienko, P., Dziezyc, M., Jakimów, P., Komoszynska, J., Michalska, W., ... & Ujma, M. (2020). Review of consumer wearables in emotion, stress, meditation, sleep, and activity detection and analysis. arXiv preprint arXiv:2005.00093.

[12] R. S. Binti Rosli and R. F. Olanrewaju, "Mobile Heart Rate Detection System (MoHeRDS) for Early Warning of Potentially-Fatal Heart Diseases," 2016 International Conference on Computer and Communication Engineering (ICCCE), Kuala Lumpur, Malaysia, 2016, pp. 422-427, doi: 10.1109/ICCCE.2016.95.

[13] V. Selvakumar, A. Achanta and N. Sreeram, "Machine Learning based Chronic Disease (Heart Attack) Prediction," 2023 International Conference on Innovative Data Communication Technologies and Application (ICIDCA), Uttarakhand, India, 2023, pp. 1-6, doi: 10.1109/ICIDCA56705.2023.10099566.

[14] E. Talab, O. Mohamed, L. Begum, F. Aloul and A. Sagahyroon, "Detecting Heart Anomalies Using Mobile Phones and Machine Learning," 2019 IEEE 19th International Conference on Bioinformatics and Bioengineering (BIBE), Athens, Greece, 2019, pp. 428-432, doi: 10.1109/BIBE.2019.00083.

[15] Gusev, M., Stojmenski, A., & Guseva, A. (2017). ECGalert: A heart attack alerting system. In ICT Innovations 2017: Data-Driven Innovation. 9th International Conference, ICT Innovations 2017, Skopje, Macedonia, September 18-23, 2017, Proceedings 9 (pp. 27-36). Springer International Publishing.

[16] Jocher, G., Chaurasia, A., & Qiu, J. (2023). Ultralytics YOLO (Version 8.0.0) [Computer software]. https://github.com/ultralytics/ultralytics

[17] Karna, Nyoman & Putra, Made Adi Paramartha & Rachmawati, Syifa & Abisado, Mideth & Sampedro, Gabriel. (2023). Toward Accurate Fused Deposition Modeling 3D Printer Fault Detection Using Improved YOLOv8 With Hyperparameter Optimization. IEEE Access. PP. 1-1. 10.1109/ACCESS.2023.3293056

[18] Workspace Home (roboflow.com)

[19] Khan, Ali Haider; Hussain, Muzammil (2021), "ECG Images dataset of Cardiac Patients ", Mendeley Data, V2, doi: 10.17632/gwbz3fsgp8.2

Authorized licensed use limited to: KIIT University. Downloaded on March 09,2026 at 11:00:08 UTC from IEEE Xplore. Restrictions apply.